Magnetica	Product Technical Specification	Code : **07932**
	Switch Mode Transformer 125W 92kHz 700uH 28V	Class Code : **2169.0004**
Date: 19.03.2015	Revision: 0	Page 1 of 2

ORIGINALLY DEVELOPED FOR ST L6599A

FOR MORE INFO:
AN 3105, AN 3106
WWW.ST.COM

MAIN FEATURES

- ✓ DC/DC LLC RESONANT SWITCHING TRANSFORMER
- ✓ LEAKAGE INDUCTANCE INTEGRATED
- ✓ REINFORCED INSULATION (CLASS II)
- ✓ THERMAL CLASS B
- ✓ ROHS COMPLIANT
- ✓ COIL FORMER PATENTED
- ✓ 3D STEP FILE AVAILABLE DC/DC LLC RESONANT

TYPICAL APPLICATION

BOUNDARY CONDITIONS:
$V_{RRM}(D1)=V_{RRM}(D2) > 100V$
C_R=33nF @ 125W P_{OUT} – 92kHz – 350V_{DC}
$V_{CR} \geq 600V$
$V_{DS}(M1)=V_{DS}(M2) > 500V$

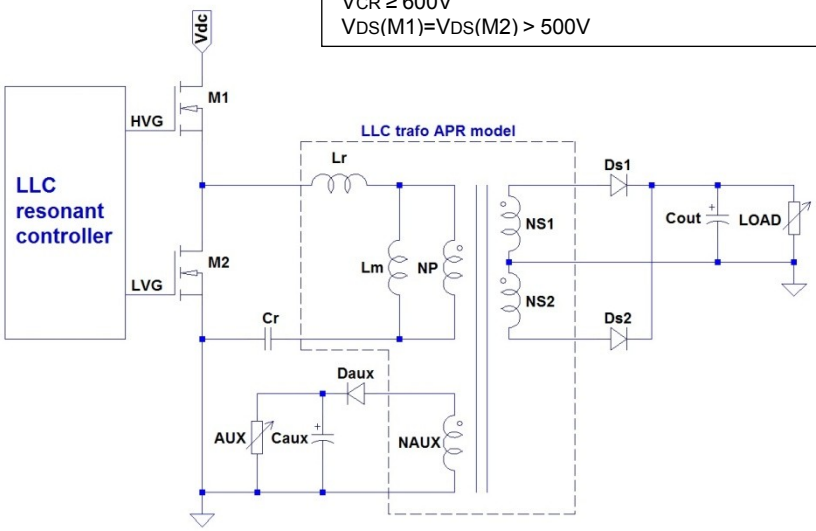

TECHNICAL DATA

PRIMARY INDUCTANCE L_P[1] *(MEASURE 2-4, F 1kHz, TA 20°C)*	700 uH
LEAKAGE INDUCTANCE L_R[2] *(MEASURE 2-4, PIN 8÷14 IN S.C, F 10kHz, TA 20°C)*	90 uH
MAGNETIZIG INDUCTANCE L_M[1]	610 uH
TRANSFORMER RATIO[3] *(TA 20°C)*	
$L_P \Leftrightarrow L_{AUX}$	11
$L_P \Leftrightarrow L_{S1}$	7.07
$L_P \Leftrightarrow L_{S2}$	7.07
RESONANCE FREQUENCY [4]	92kHz
2ND RESONANCE FREQUENCY [4]	33kHz
PRIMARY TO SECONDARY INSULATION *(F 50Hz, TEST DURATION 2", TA 20°C)*	4kV
WEIGHT	105 g APPROX

DERATING OUTPUT POWER

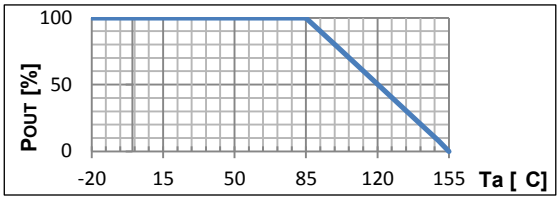

WORKING FREQUENCY VS I_{OUT}

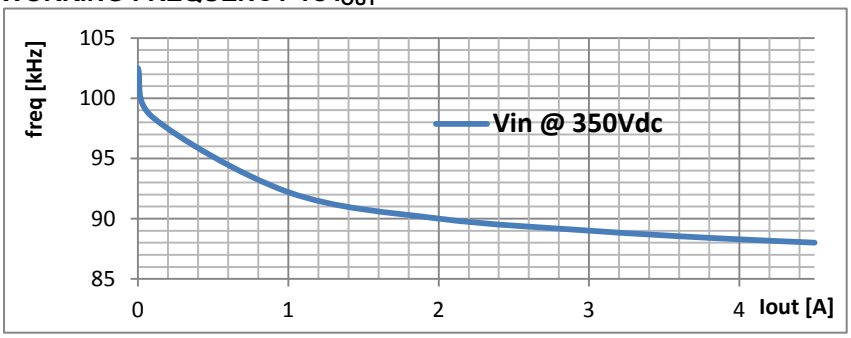

THERMAL MAP MAX LOAD

CONDITIONS:

@ 350V_{DC} - 28V_{OUT}
125WP_{OUT} – 92kHz

TRANSFORMER DETECTED TEMPERATURE:

MIN 46.8 °C
MAX 72.1 °C
AVG 61.4 °C

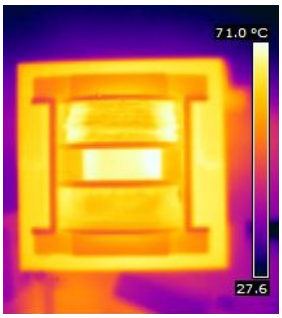

V_{OUT} VS FREQUENCY @ NO LOAD

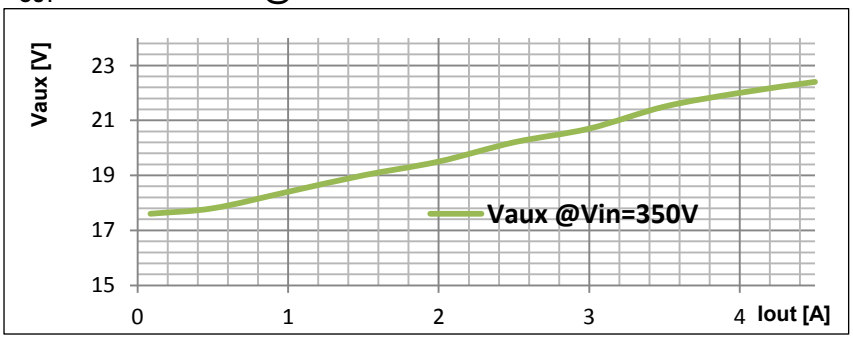

CRITICAL POUT IN BOUNDARY REGION

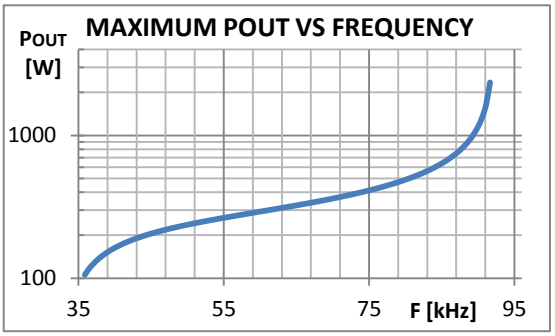

NOTE: THE SPECIFICATION COULD BE SUBJECT TO CHANGE WITHOUT NOTICE

(1) INDUCTANCE TOLERANCE: ±15%; (2) INDUCTANCE TOLERANCE: ±10% ; (3) RATIO TOLERANCE: ±0.5; (4) VALUES CALCULATED

Copyright Magnetica, cannot be reproduced even partially without written authorization

SCHEMATIC

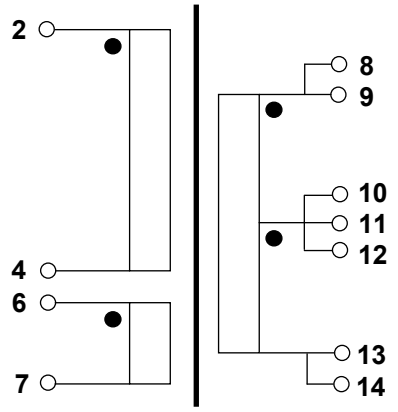

PIN DESCRIPTION

PIN (*)	*FUNCTION*	
1	NOT CONNECTED	
2	PRIMARY DRAIN/SOURCE	350 [VDC NOM]
3	NOT PRESENT	
4	PRIMARY WITH CR	
5	NOT CONNECTED	
6	AUXILIARY	15V 50mA
7	AUXILIARY GROUND	
8_A	SECONDARY D1	125W MAX 28V 4.5A
9_A		
10_B	GROUND SECONDARY	
11_B		
12_B		
13_C	SECONDARY D2	
14_C		

(*)PINS WITH THE SAME SUBSCRIPT MUST BE CONNECTED TOGETHER ON PCB

DIMENSIONAL DRAWING

RoHS Compliant

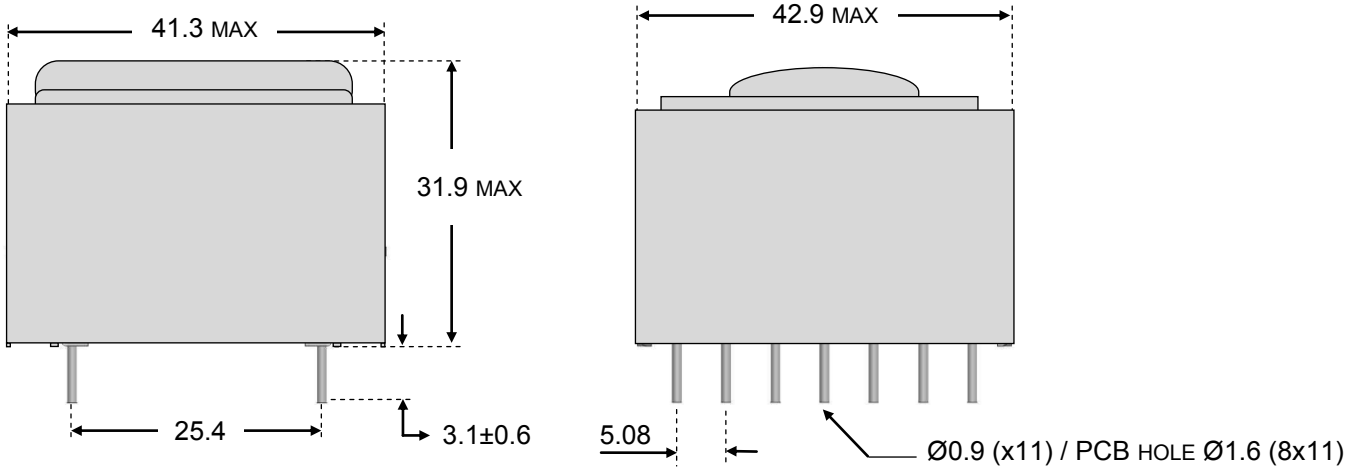

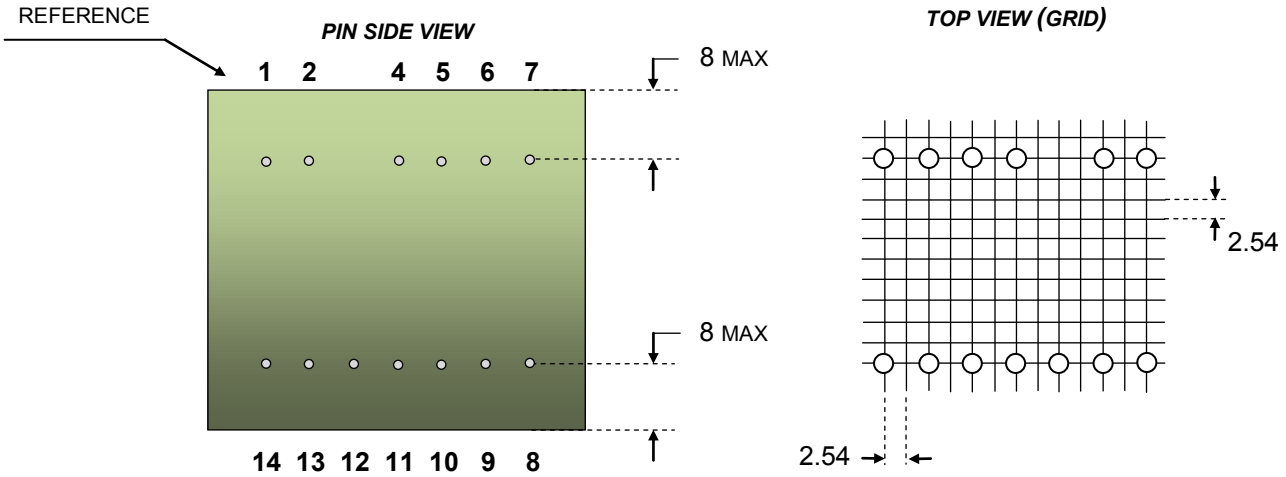

QUOTES IN MILLIMETERS, DRAWING NOT IN SCALE

Magnetica
Electromagnetic components
Switch mode power supply
Via Marcora, 20 60022 Castelfidardo (AN)
Tel +39 071 7823855 www.magnetica.eu

Copyright Magnetica, cannot be reproduced even partially without written authorization